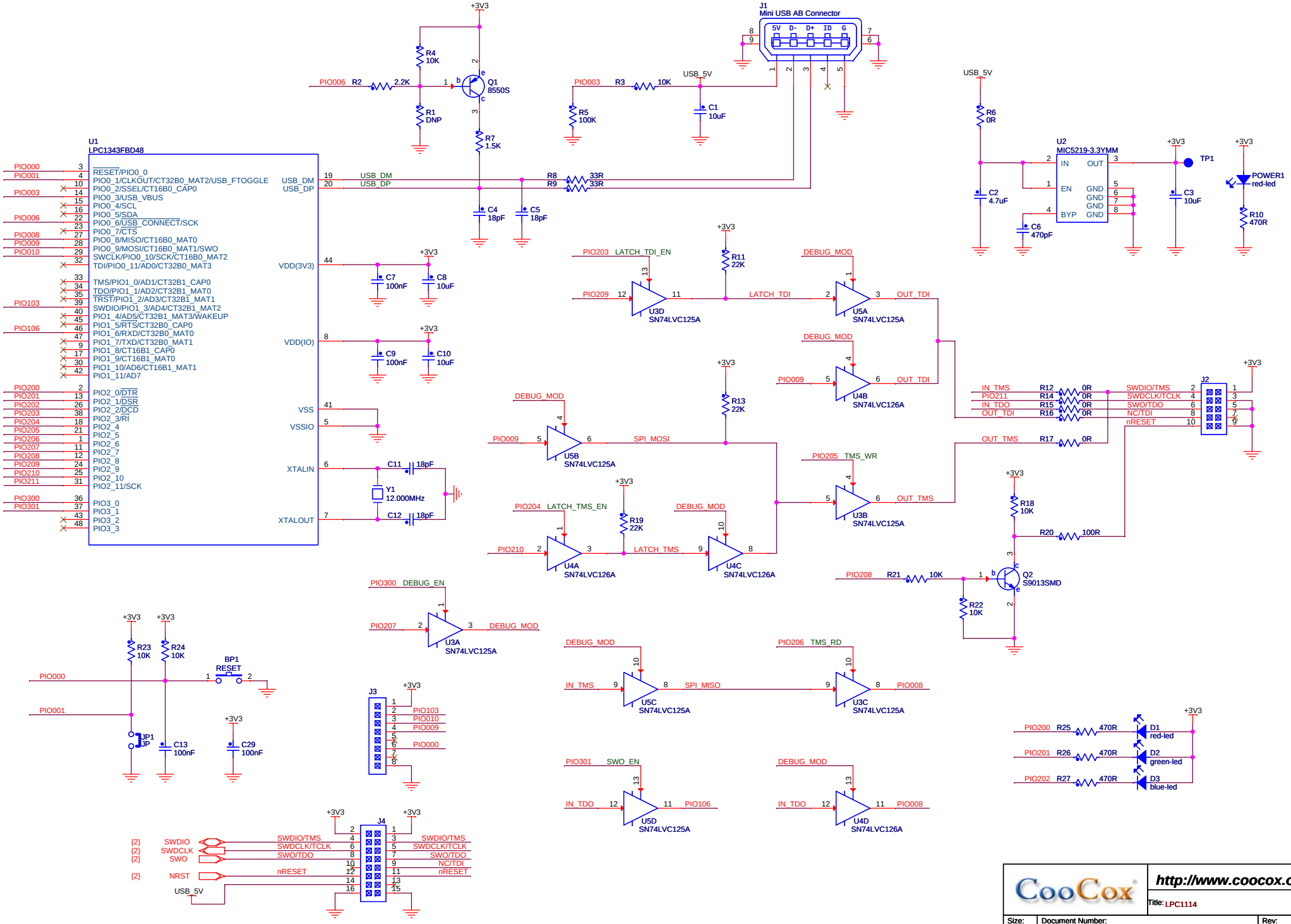
U1
LPC1343FBD48
RESET/PIO0_0
PIO0_1/CLKOUT/CT32B0_MAT2/USB_FTOGGLE
PIO0_2/SSEL/CT16B0_CAP0
PIO0_3/USB_VBUS
PIO0_4/SCL
PIO0_5/SDA
PIO0_6/USB_CONNECT/SCK
PIO0_7/CTS
PIO0_8/MISO/CT16B0_MAT0
PIO0_9/MOSI/CT16B0_MAT1/SWO
SWCLK/PIO0_10/SCK/CT16B0_MAT2
TDI/PIO0_11/AD0/CT32B0_MAT3
TMS/PIO1_0/AD1/CT32B1_CAP0
TDO/PIO1_1/AD2/CT32B1_MAT0
TRST/PIO1_2/AD3/CT32B1_MAT1
SWDIO/PIO1_3/AD4/CT32B1_MAT2
PIO1_4/AD5/CT32B1_MAT3/WAKEUP
PIO1_5/RTS/CT32B0_CAP0
PIO1_6/RXD/CT32B0_MAT0
PIO1_7/TXD/CT32B0_MAT1
PIO1_8/CT16B1_CAP0
PIO1_9/CT16B1_MAT0
PIO1_10/AD6/CT16B1_MAT1
PIO1_11/AD7
PIO2_0/DTR
PIO2_1/DSR
PIO2_2/DCD
PIO2_3/RI
PIO2_4
PIO2_5
PIO2_6
PIO2_7
PIO2_8
PIO2_9
PIO2_10
PIO2_11/SCK
PIO3_0
PIO3_1
PIO3_2
PIO3_3
USB_DM
USB_DP
VDD(3V3)
VDD(IO)
VSS
VSSIO
XTALIN
XTALOUT
J1
Mini USB AB Connector
5V D- D+ ID G
Q1
8550S
R1 DNP
R2 2.2K
R3 10K
R4 10K
R5 100K
R6 0R
R7 1.5K
R8 33R
R9 33R
R10 470R
R11 22K
R12 0R
R13 22K
R14 0R
R15 0R
R16 0R
R17 0R
R18 10K
R19 22K
R20 100R
R21 10K
R22 10K
R23 10K
R24 10K
R25 470R
R26 470R
R27 470R
C1 10uF
C2 4.7uF
C3 10uF
C4 18pF
C5 18pF
C6 470pF
C7 100nF
C8 10uF
C9 100nF
C10 10uF
C11 18pF
C12 18pF
C13 100nF
C29 100nF
Y1
12.000MHz
U2
MIC5219-3.3YMM
IN OUT
EN GND
BYP GND
TP1
POWER1
red-led
Q2
S9013SMD
BP1
RESET
JP1
JP
J2
J3
J4
D1
red-led
D2
green-led
D3
blue-led
U3A
SN74LVC125A
U3B
SN74LVC125A
U3D
SN74LVC125A
U4A
SN74LVC126A
U4B
SN74LVC126A
U4C
SN74LVC126A
U4D
SN74LVC126A
U5A
SN74LVC125A
U5B
SN74LVC125A
U5C
SN74LVC125A
U5D
SN74LVC125A
PIO203 LATCH_TDI_EN
PIO209
LATCH_TDI
DEBUG_MOD
OUT_TDI
PIO009
SPI_MOSI
PIO205 TMS_WR
OUT_TMS
PIO204 LATCH_TMS_EN
PIO210
LATCH_TMS
PIO300 DEBUG_EN
PIO207
PIO206 TMS_RD
IN_TMS
SPI_MISO
PIO008
PIO301 SWO_EN
IN_TDO
PIO106
PIO208
PIO200
PIO201
PIO202
SWDIO/TMS
SWDCLK/TCLK
SWO/TDO
NC/TDI
nRESET
USB_5V
+3V3
http://www.coocox.org/
Title: LPC1114
Size: A3
Document Number: CoLinkEx
Rev: A
Draw By:
Date: Tuesday, November 08, 2011
Sheet: 1 of 2

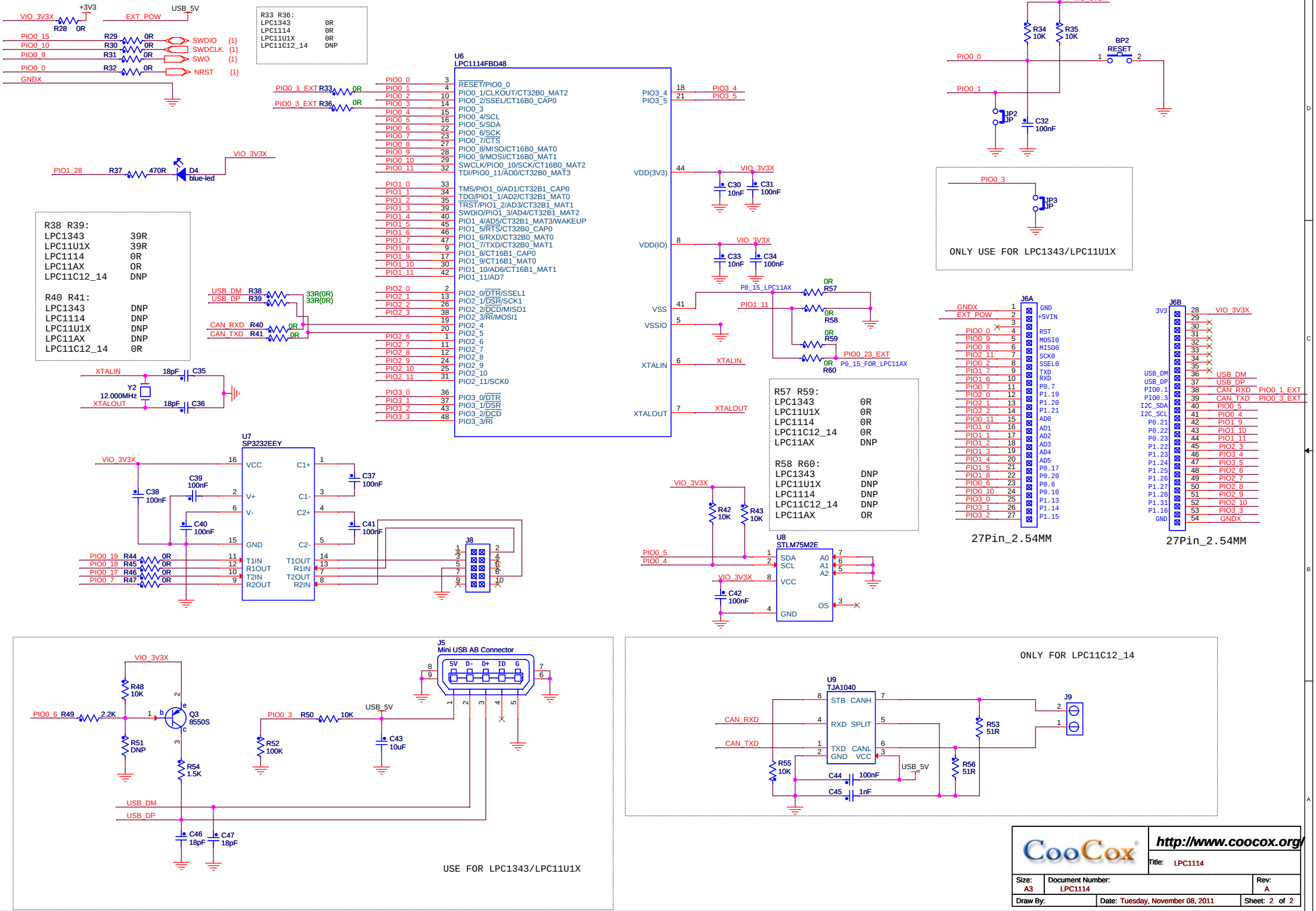
U6
LPC1114FBD48
U7
SP3232EEY
U8
STLM75M2E
U9
TJA1040
J5
Mini USB AB Connector
J6A
27Pin_2.54MM
J6B
27Pin_2.54MM
J8
J9
BP2
RESET
D4
blue-led
Y2
12.000MHz
Q3
8550S
R33 R36:
LPC1343 0R
LPC1114 0R
LPC11U1X 0R
LPC11C12_14 DNP
R38 R39:
LPC1343 39R
LPC11U1X 39R
LPC1114 0R
LPC11AX 0R
LPC11C12_14 DNP
R40 R41:
LPC1343 DNP
LPC1114 DNP
LPC11U1X DNP
LPC11AX DNP
LPC11C12_14 0R
R57 R59:
LPC1343 0R
LPC11U1X 0R
LPC1114 0R
LPC11C12_14 0R
LPC11AX DNP
R58 R60:
LPC1343 DNP
LPC11U1X DNP
LPC1114 DNP
LPC11C12_14 DNP
LPC11AX 0R
ONLY USE FOR LPC1343/LPC11U1X
ONLY FOR LPC11C12_14
USE FOR LPC1343/LPC11U1X
CooCox
http://www.coocox.org/
Title: LPC1114
Size: A3
Document Number: LPC1114
Rev: A
Draw By:
Date: Tuesday, November 08, 2011
Sheet: 2 of 2